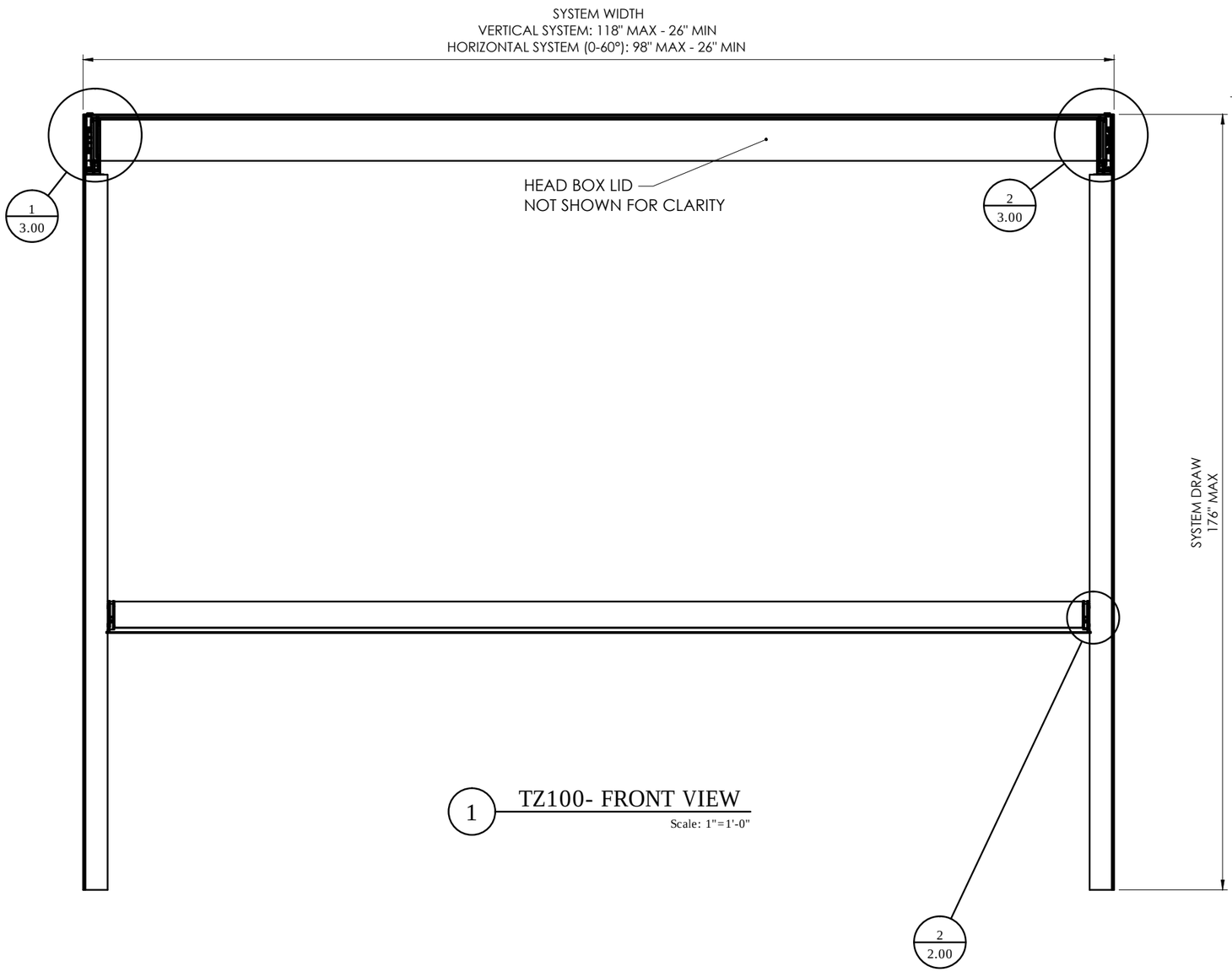


1 TZ100- FRONT VIEW
Scale: 1"=1'-0"

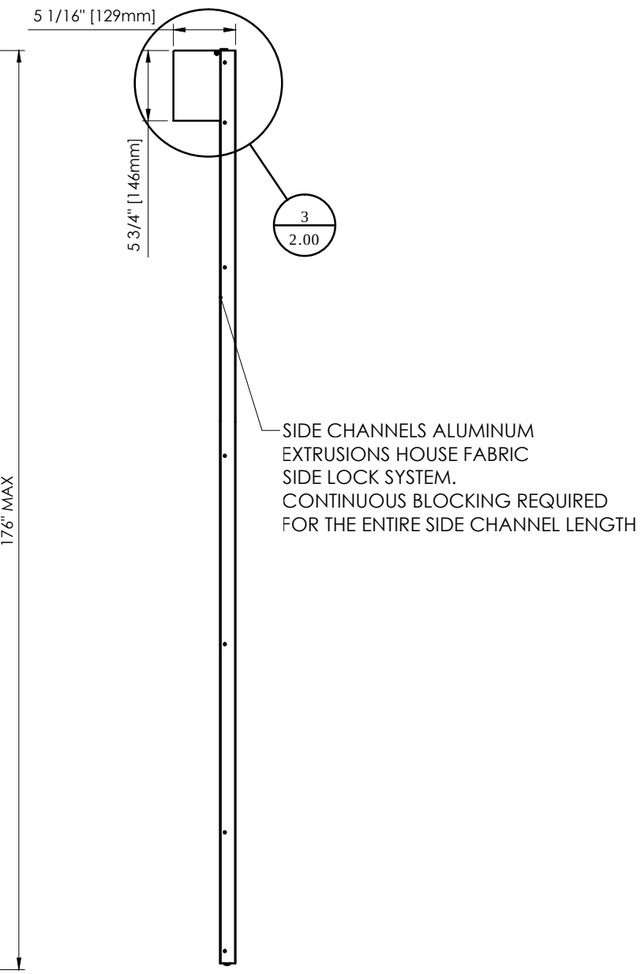


2 TZ100- SIDE VIEW
Scale: 1"=1'-0"

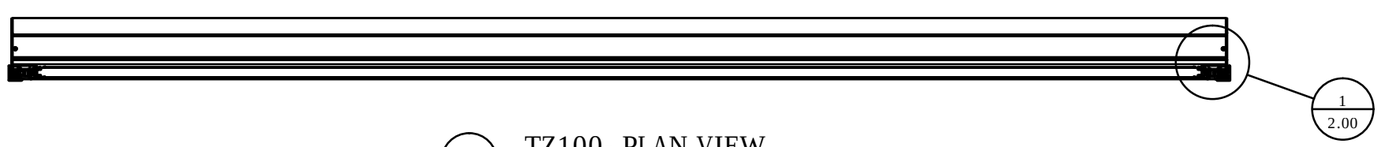


3 TZ100- PLAN VIEW
Scale: 1"=1'-0"

HunterDouglas Architectural
www.hunterdouglasarchitectural.com
PHONE: 626.578.1936
9900 GIDLEY STREET
EL MONTE, CA 91731

☐ ALL SHOP DRAWINGS, NOTATIONS, AND DIMENSIONS CONTAINED HEREIN ARE APPROVED FOR FABRICATION WITHOUT FURTHER COMMENT

☐ ALL SHOP DRAWINGS, NOTATIONS AND DIMENSIONS CONTAINED HEREIN ARE APPROVED FOR FABRICATION AS NOTED

SIGNATURE:

DATE:

COMPANY:

REMARKS:

| REV | DATE | REVISION DESCRIPTION | BY |
|---|---|---|---|
| 0 | 08/18/16 | ISSUED FOR APPROVAL | RC |

DRAWING CONTENT:
TENSION ZIPPER SHADE

PROJECT NAME:
**TZ100**

SYSTEM TYPE:
**TENSION SYSTEM**

PROJECT NUMBER: **00-000000**

| | | | |
|---|---|---|---|
| DRAWN BY: | DESIGNER | DATE: | MM/DD/YY |
| CHECKED BY: | P. MNGR. | DATE: | MM/DD/YY |

DWG NO.
**1.00**

© DESIGN COPYRIGHT 2015 BY HUNTER DOUGLAS CONTRACT SOLAR CONTROL ALL RIGHTS RESERVED

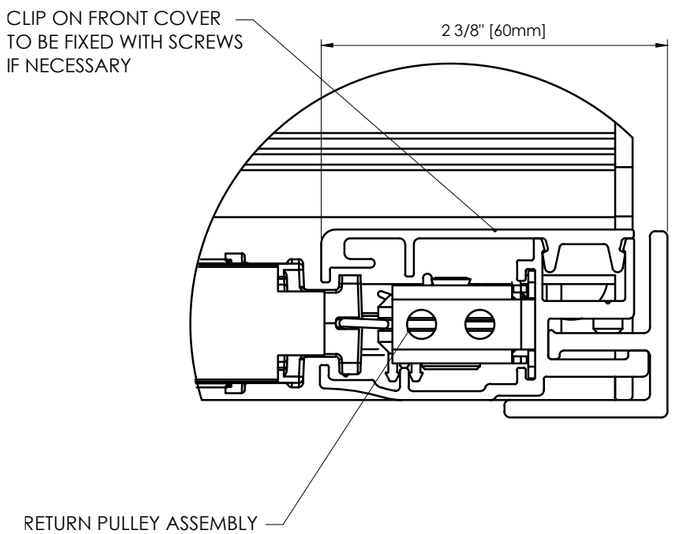


1 SIDE CHANNEL
Scale: 1'-0"=1'-0"

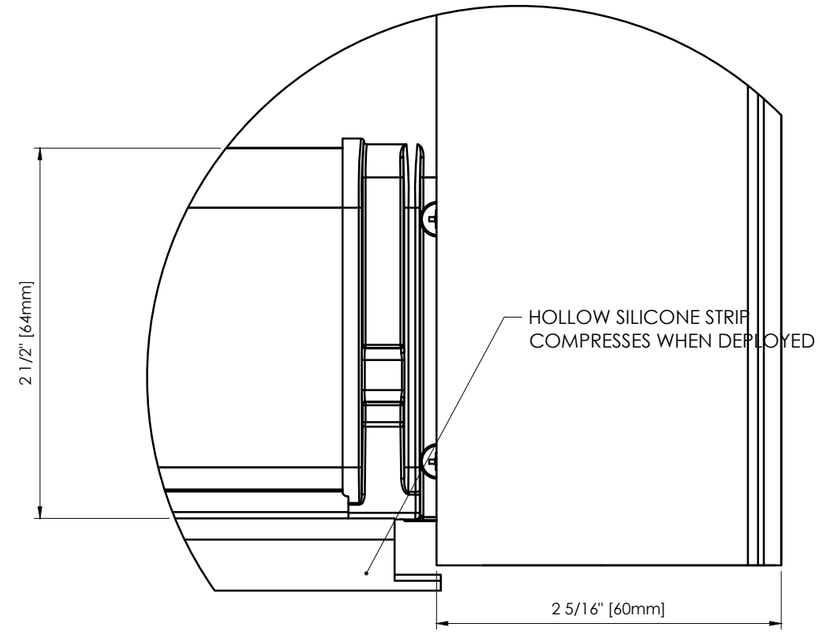


2 HEMBAR
Scale: 1'-0"=1'-0"

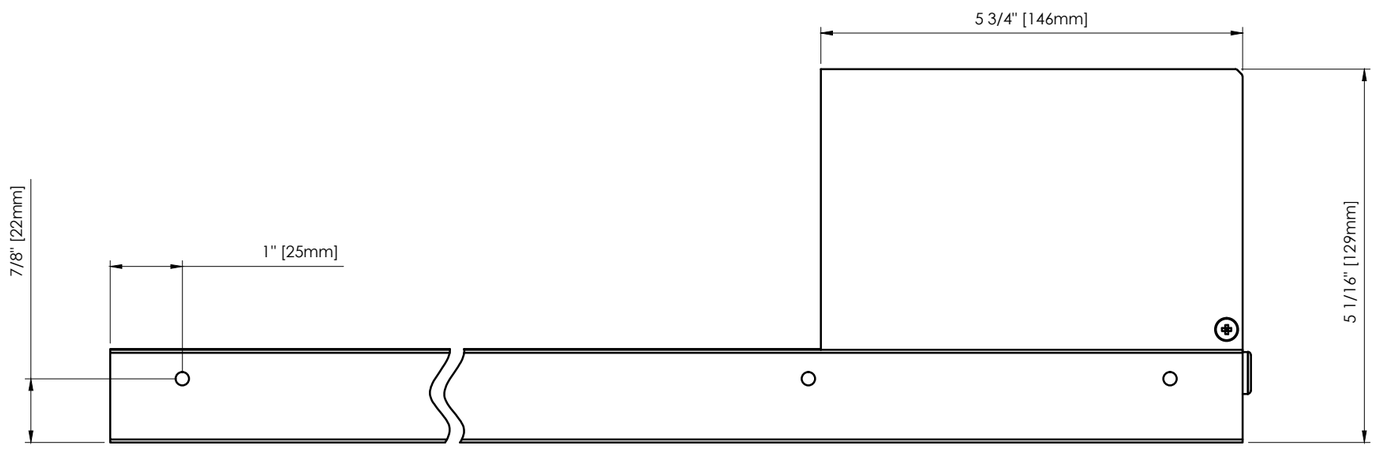


MOUNTING RAIL FIXINGS HOLES SPACED
APPROXIMATE EVERY 15" TO SUIT
SYSTEM SIZE.

3 WALL PLATE FIXING HOLES
Scale: 6'-0"=1'-0"

© DESIGN COPYRIGHT 2015 BY HUNTER DOUGLAS CONTRACT SOLAR CONTROL ALL RIGHTS RESERVED

HunterDouglas Architectural
www.hunterdouglasarchitectural.com
PHONE: 626.578.1936
9900 GIDLEY STREET
EL MONTE, CA 91731

☐ ALL SHOP DRAWINGS, NOTATIONS, AND DIMENSIONS CONTAINED HEREIN ARE APPROVED FOR FABRICATION WITHOUT FURTHER COMMENT

☐ ALL SHOP DRAWINGS, NOTATIONS AND DIMENSIONS CONTAINED HEREIN ARE APPROVED FOR FABRICATION AS NOTED

SIGNATURE:
DATE:
COMPANY:
REMARKS:

| REV | DATE | REVISION DESCRIPTION | BY |
|---|---|---|---|
| 0 | 08/18/16 | ISSUED FOR APPROVAL | RC |

DRAWING CONTENT:
TENSION ZIPPER SHADE
DETAILS

PROJECT NAME:
**TZ100**

SYSTEM TYPE:
**TENSION SYSTEM**

PROJECT NUMBER: **00-000000**

| | | | |
|---|---|---|---|
| DRAWN BY: | DESIGNER | DATE: | MM/DD/YY |
| CHECKED BY: | P. MNGR. | DATE: | MM/DD/YY |

DWG NO.
**2.00**

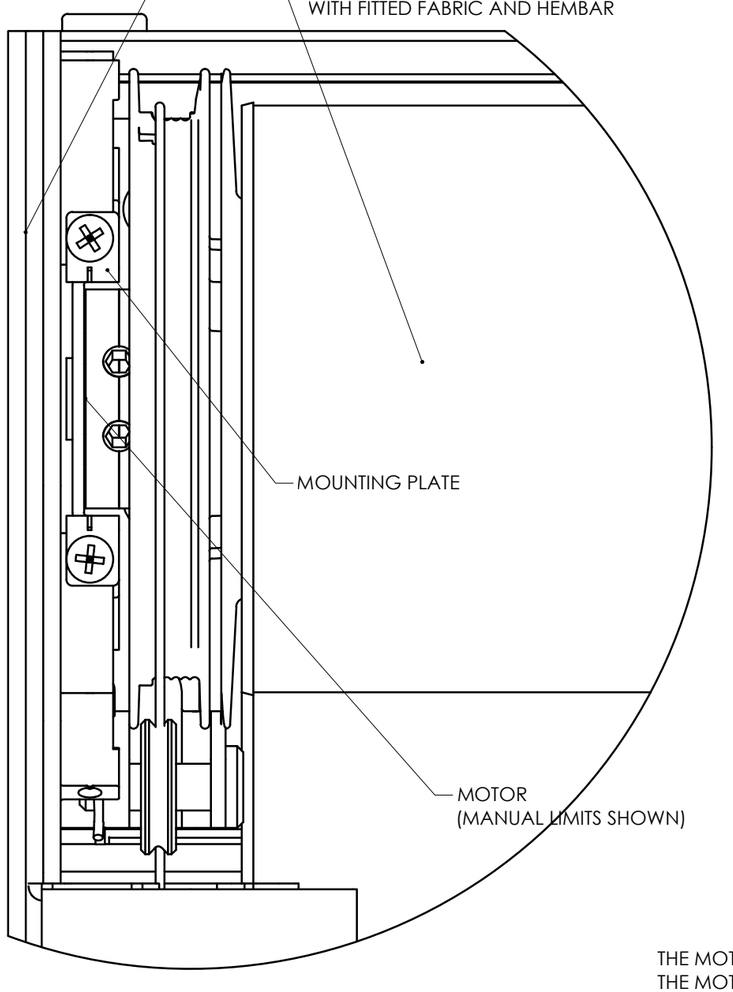


1 HEAD BOX LEFT- FRONT

Scale: 1'-0"=1'-0"

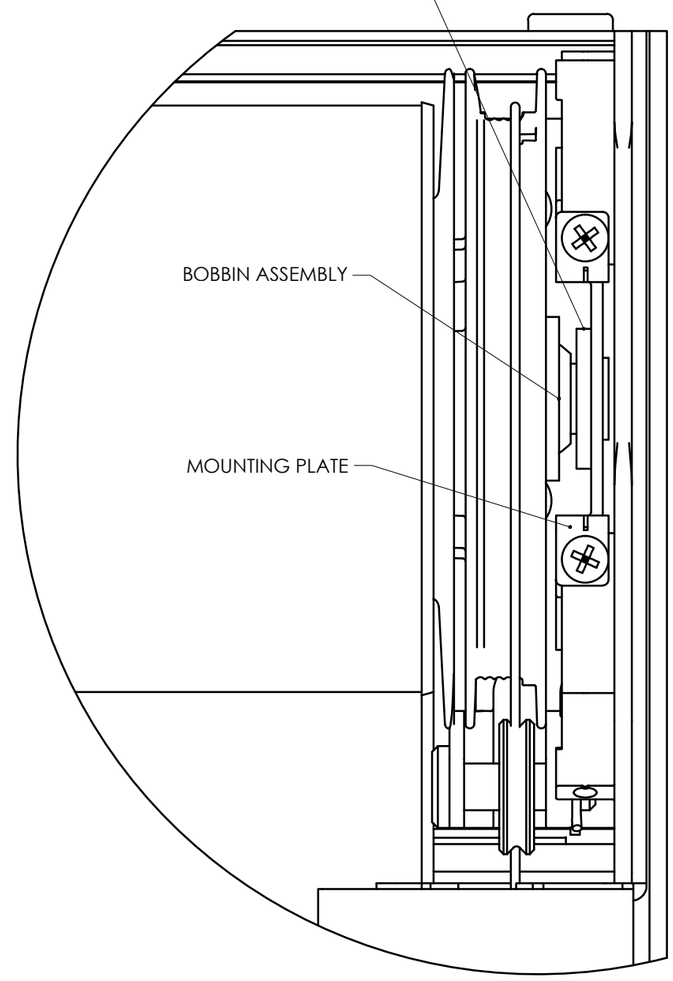


2 HEAD BOX RIGHT- FRONT

Scale: 1'-0"=1'-0"

THE MOTOR IS FITTED AT INSTALLATION
THE MOTOR CAN BE FITTED AT EITHER END
OF THE TUBE TO SUIT INSTALLATION.

THE MOTOR TUBE ASSEMBLY AND
MOUNTING PLATED ARE SUPPLIED LOOSE.

HunterDouglas Architectural
www.hunterdouglasarchitectural.com
PHONE: 626.578.1936
9900 GIDLEY STREET
EL MONTE, CA 91731

☐ ALL SHOP DRAWINGS, NOTATIONS, AND DIMENSIONS CONTAINED HEREIN ARE APPROVED FOR FABRICATION WITHOUT FURTHER COMMENT

☐ ALL SHOP DRAWINGS, NOTATIONS AND DIMENSIONS CONTAINED HEREIN ARE APPROVED FOR FABRICATION AS NOTED

SIGNATURE:

DATE:

COMPANY:

REMARKS:

| REV | DATE | REVISION DESCRIPTION | BY |
|---|---|---|---|
| 0 | 08/18/16 | ISSUED FOR APPROVAL | RC |

DRAWING CONTENT:
TENSION ZIPPER SHADE
DETAILS

PROJECT NAME:
**TZ100**

SYSTEM TYPE:
**TENSION SYSTEM**

PROJECT NUMBER: **00-000000**

DRAWN BY: **DESIGNER** DATE: **MM/DD/YY**

CHECKED BY: **P. MNGR.** DATE: **MM/DD/YY**

DWG NO.
**3.00**

© DESIGN COPYRIGHT 2015 BY HUNTER DOUGLAS CONTRACT SOLAR CONTROL ALL RIGHTS RESERVED

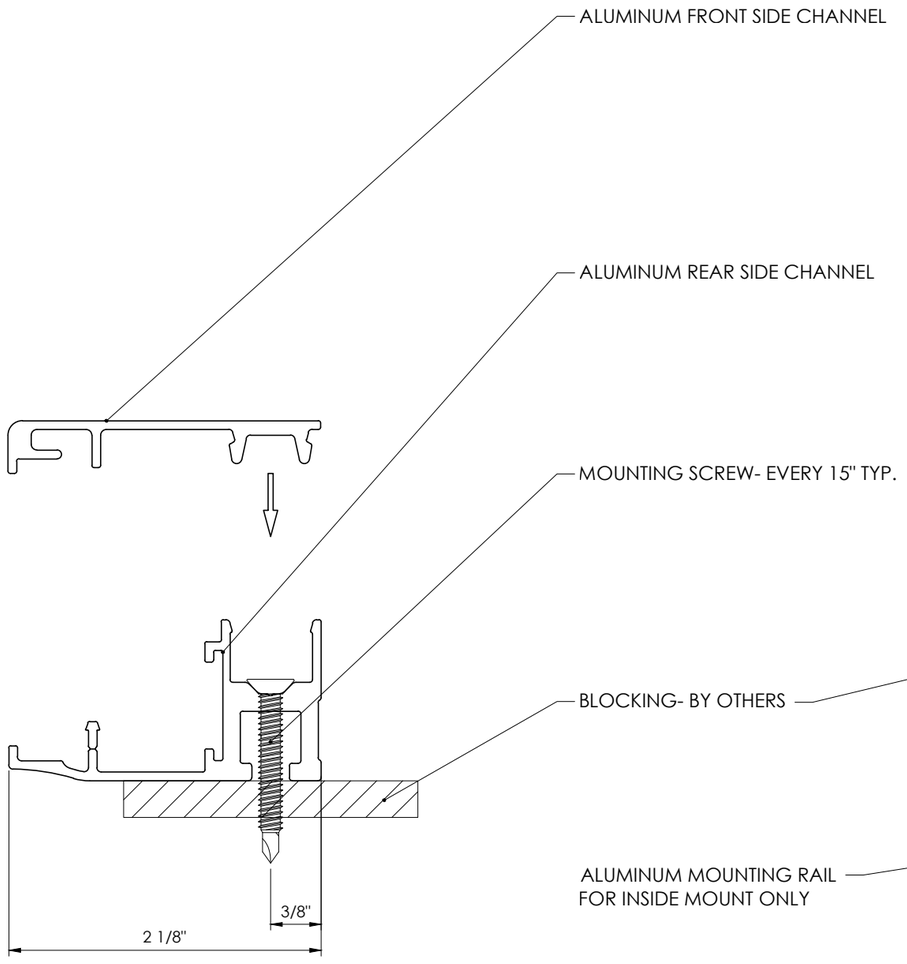


1 SIDE CHANNEL- FACE MOUNT

Scale: 1'-0"=1'-0"

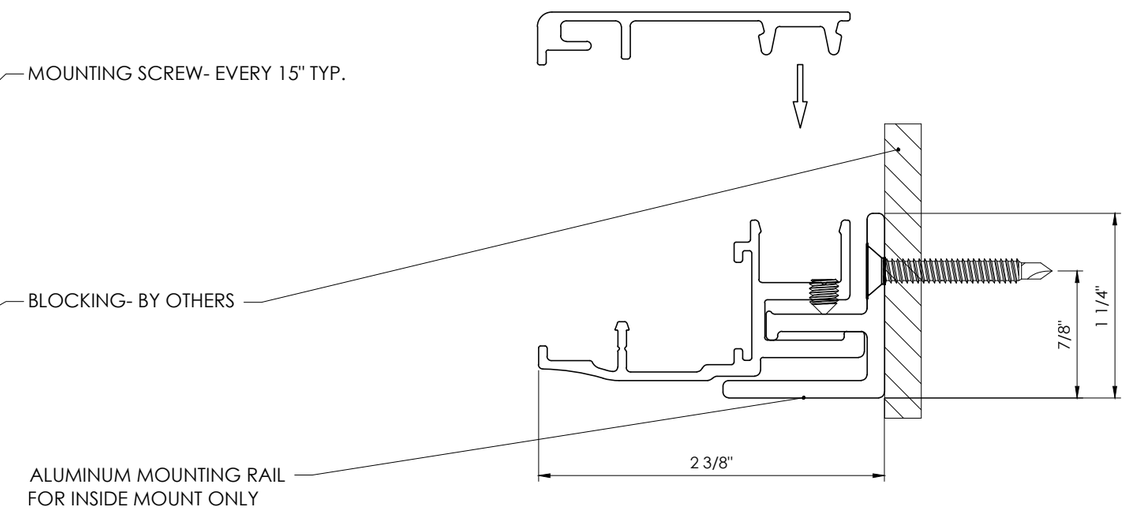


2 SIDE CHANNEL- INSIDE MOUNT

Scale: 1'-0"=1'-0"

NOTE:
CONTINUOUS BLOCKING REQUIRED FOR THE ENTIRE LENGTHS OF THE SIDE CHANNELS.

© DESIGN COPYRIGHT 2015 BY HUNTER DOUGLAS CONTRACT SOLAR CONTROL ALL RIGHTS RESERVED

HunterDouglas Architectural
www.hunterdouglasarchitectural.com
PHONE: 626.578.1936
9900 GIDLEY STREET
EL MONTE, CA 91731

☐ ALL SHOP DRAWINGS, NOTATIONS, AND DIMENSIONS CONTAINED HEREIN ARE APPROVED FOR FABRICATION WITHOUT FURTHER COMMENT

☐ ALL SHOP DRAWINGS, NOTATIONS AND DIMENSIONS CONTAINED HEREIN ARE APPROVED FOR FABRICATION AS NOTED

SIGNATURE:

DATE:

COMPANY:

REMARKS:

| REV | DATE | REVISION DESCRIPTION | BY |
|---|---|---|---|
| 0 | 08/18/16 | ISSUED FOR APPROVAL | RC |

DRAWING CONTENT:
TENSION ZIPPER SHADE DETAILS

PROJECT NAME:
**TZ100**

SYSTEM TYPE:
**TENSION SYSTEM**

PROJECT NUMBER: **00-000000**

| | | | |
|---|---|---|---|
| DRAWN BY: | DESIGNER | DATE: | MM/DD/YY |
| CHECKED BY: | P. MNGR. | DATE: | MM/DD/YY |

DWG NO.
**4.00**